RX 300

FR AERIAL RIG PRO

EN 795/B		

Notified body supervising the production of the equipment.
(***Notified body, at which supervises the production of the equipment***):
APAVE SUDEUROPE SAS - BP 193 - 13322 MARSEILLE CEDEX 16 – FRANCE

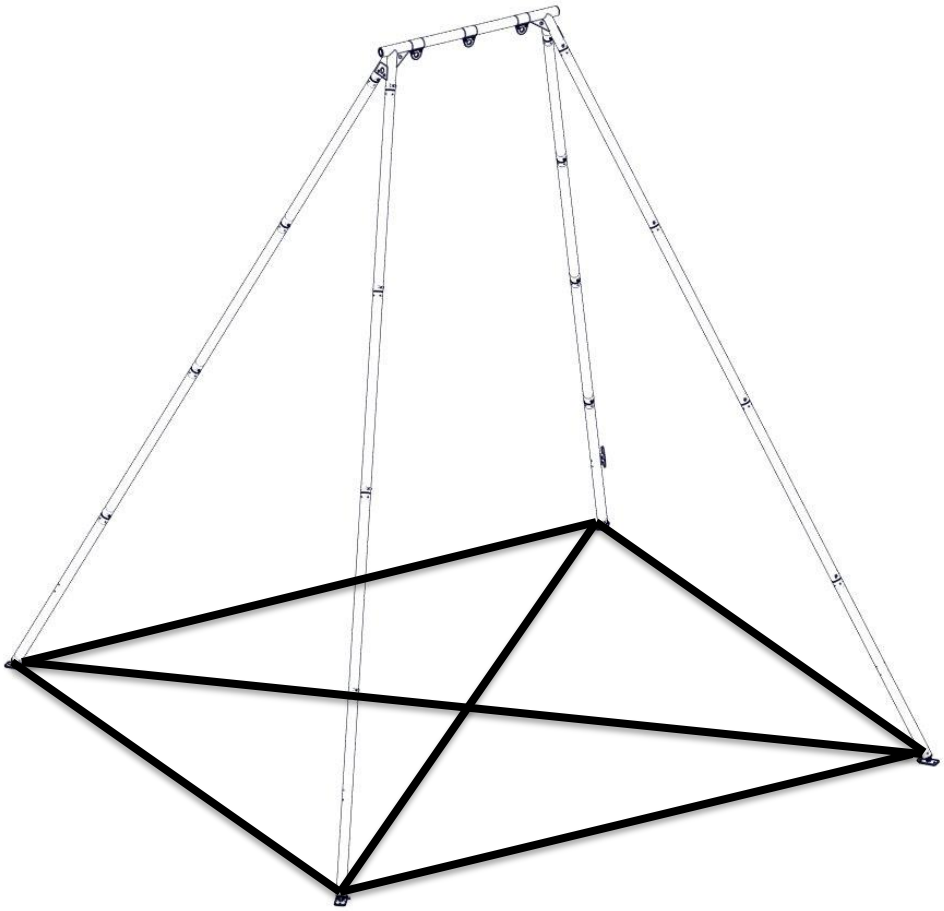

Figure 1 - General view of the equipment RX220

TABLE OF CONTENTS:

1. GENERAL DESCRIPTION**Błąd! Nie zdefiniowano zakładki.**
2. WORKING LOAD AND WEIGHT CAPACITY**Błąd! Nie zdefiniowano zakładki.**
3. TRANSPORT AND WEIGHT..... 6
4. BAG CONTENTS....**Błąd! Nie zdefiniowano zakładki.**
5. MAINTENANCE AND STORAGE..... 7
6. OVERALL DIMENTIONS..... 8
7. DURATION OF USE 9
8. PERIODIC INSPECTIONS 9
9. FRAME INSTALLATION..... 10
10. INSTALLATION OF THE WORK ROPE USING A KNAG AND CLIMBING BLOCKS 20
11. PERSONAL PROTECTION EQUIPMENT INSTALLATION **Błąd! Nie zdefiniowano zakładki.**
12. MAIN RULES FOR THE USE OF PERSONAL PROTECTION EQUIPMENT AGAINST FALLS FROM A HEIGHT **Błąd! Nie zdefiniowano zakładki.**
13. WARRANTY .....**Błąd! Nie zdefiniowano zakładki.**
14. USE SHEET.....**Błąd! Nie zdefiniowano zakładki.**

1. GENERAL DESCRIPTION

The RX300 frame is a stable structure and ensures safety during aerial acrobatics with the use of circus wheels, silks, hammocks or other acrobatic devices. The frame of the device is made entirely of reinforced aluminum alloy and can be used indoors and outdoors.

The main beam is made of a pipe with a diameter of 70mm. There are 3 bent plates attached to the main beam, enabling the suspension of necessary accessories. Holes were made on the side reinforcements of the beam to allow the suspension of pulleys to guide the working rope. The rope guiding blocks can also be mounted on the side mounting brackets.

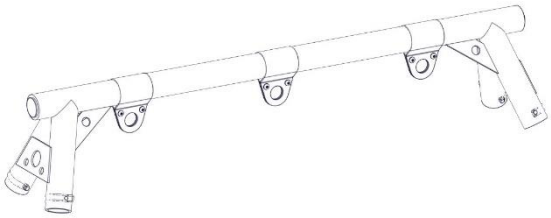

The legs are made of a pipe with a diameter of 70mm. All legs are connected with 10x70mm pipe pins.

One complete leg consists of 3 basic sections and one - equipped with a screw plug in the lower part - for mounting the foot.

Each of the 4 lower legs is equipped with a cleat for blocking the working rope. The cleats are mounted in two diagonal legs.

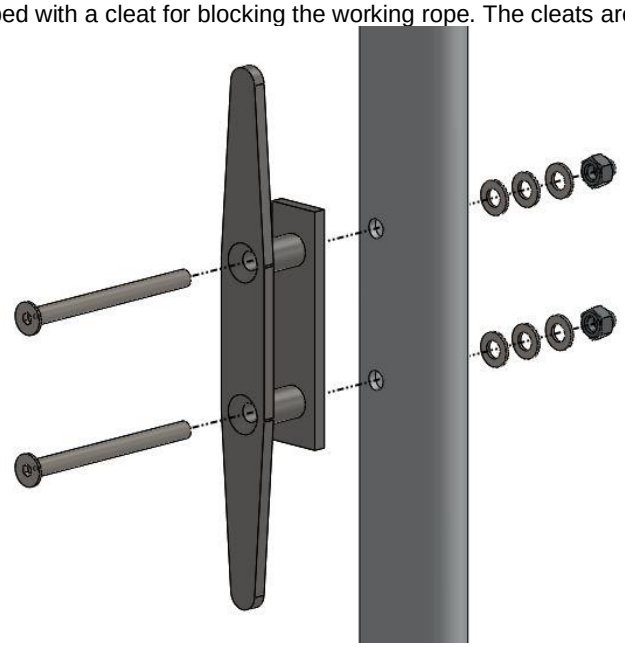

The foot is made entirely of stainless steel. From the bottom, it is equipped with a rubber that prevents the leg from slipping when working on a slippery surface. Five holes allow anchoring to the ground with tent pins. The large size of the foot ensures stability on any surface.

The oblong holes on the foot bend are intended for the assembly of the leg straps as shown later in the manual.

The RX 300 frame is an anchor point in accordance with the EN795 / B standard and can be used as a component of equipment personal protection equipment against falls from a height. The RX 300 frame provides protection for up to 1 or 2 people with a maximum weight of 150 kg.

Basic parameters of the device:

- Maximum height "under the beam": 5.5m / maximum working area: 5.05m x 5.12m
- Minimum height "under the head": 2.9m / minimum working area: 2.76m x 3.39m

2. WORKING LOAD AND WEIGHT CAPACITY

a) GENERAL INFORMATION

The device can be loaded vertically downwards in the space limited by the legs of the device.

Minimum Breaking Strength (MBS): 16-20 kN.
Permissible Working Load: 160-200 kg
Load before plastic deformation: 12kN

The maximum static load that the device can transfer to the structure during operation – 16-20 kN (***The maximum load that could be transmitted in service from the device to the static construction).***

If the device is used as part of a suspension system, the user must be equipped with a device limiting the maximum dynamic forces acting on it during the fall arrest system to max. 6kN.

b) **FOR COMMODITY DEVICES** installed on the head and / or the leg of the tripod using the UTB holder (AT017-300):
Permissible Working Load (WLL): 400kg
Safety Factor (SF): 2.1: 1.

c) **FOR PERSONAL PROTECTIVE EQUIPMENT (PPE)** attached to one of the three anchor points on the main beam:
2 people at the same time. Two people attached simultaneously to one anchor point.
In accordance with the requirements of EN795 / B, the durability of the device is min. 16kN

d) **FOR PERSONAL EVACUATION EQUIPMENT i**nstalled on the leg using the UTB bracket (AT017-300):
Permissible Working Load (WLL): 160kg
Safety Factor (SF): 10: 1.
The working load of the equipment may not exceed 160 kg!

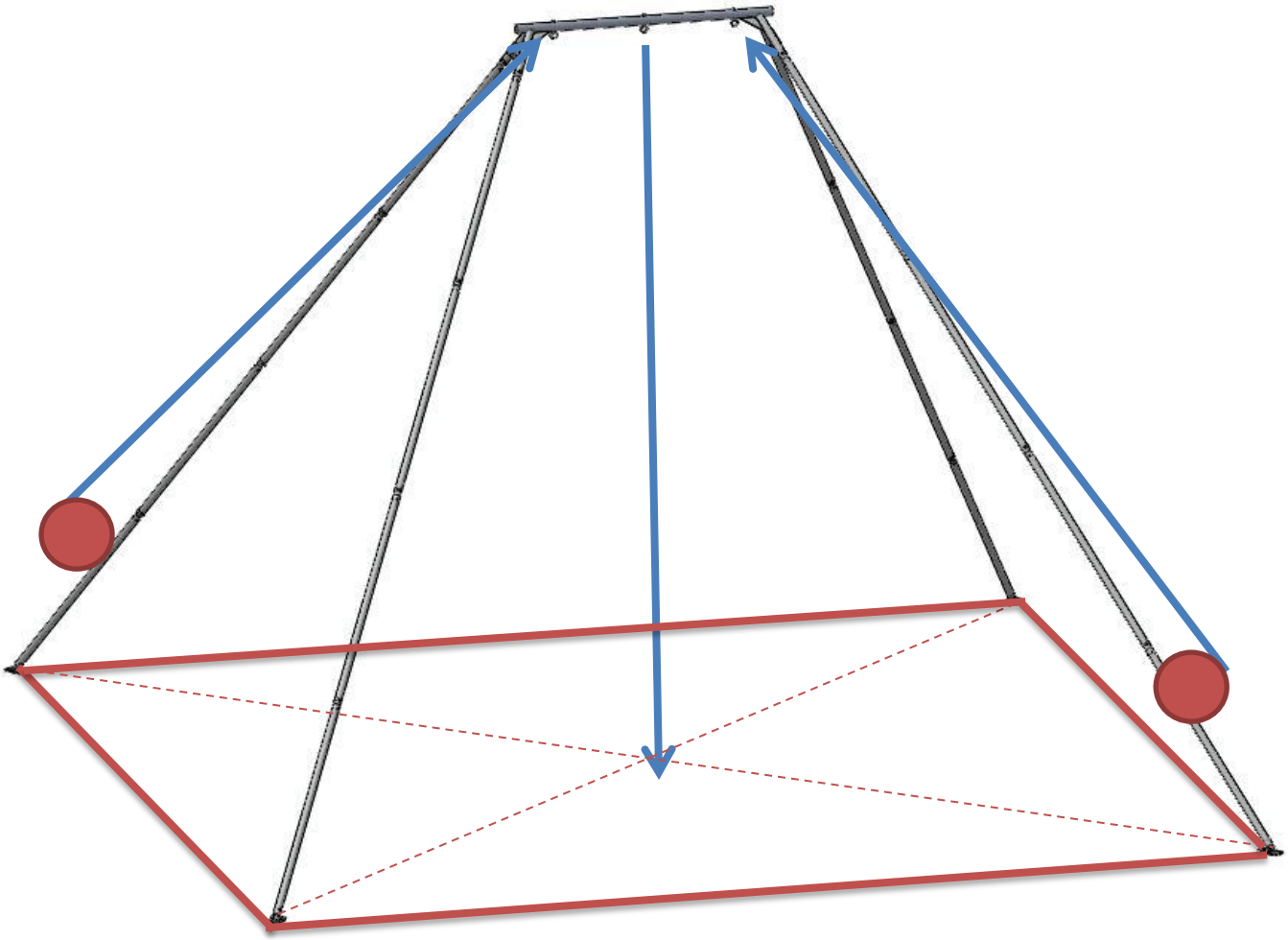

Figure 2 - Permissible load directions of the anchorage point in the internal area defined by the legs of the device

3. TRANSPORT AND WEIGHT

Weight of the frame with 4 leg sections (5,5 m high): 120.0 kg.

Weight of the frame with 3 leg sections (4,2 m high): 95.0 kg.

Weight of the frame with 2 leg sections (2,9m high): 70 kg.

Personal protective equipment must be transported in packaging that protects it against damage or getting wet, e.g. in bags made of impregnated fabric or in steel or plastic suitcases. or boxes

.

4. BAG CONTENTS

1. UPPER BEAM (in foam cover) - 1 pc.
2. JOINING LEG (with foam cover) - 4 pcs (with 2 sections) - 8 pcs (with 3 sections) 12 pcs (with 4 sections)
3. LEG FOR FOOT INSTALLATION (in a foam cover) - 2 pcs.
4. LEG FOR MOUNTING THE FOOT AND KNAGS (in a foam cover) - 2 pcs.
5. PIN FOR CONNECTING THE LEGS - 8 pcs. (With 2 sections) - 12 pcs. (With 3 sections) 16 pcs. (With 4 sections)
6. FOOT - 4 pcs.
7. Diagonal LEG TAPE - 2 pcs.
8. PILS FOR ANCHORING THE FEET 9 (fi6 x 230MM) - 8 pcs.
9. TAPE FOR FASTENING THE LEGS ON THE CIRCUMFERENCE - 1 pc.
10. SHEETS FOR INSTALLING ACROBATIC ATTACHMENTS MOUNTED ON THE TOP BEAM

    Additionally, a quick assembly / disassembly kit:
11. SINGLE CLIMBING BLOCK - 3 pcs.
12. DOUBLE CLIMBING BLOCK - 1 pc.
13. RIGID POLYESTER ROPE fi10.5mm - 25m (depending on the selected height - number of sections)
14. STAINLESS KNAGA WITH MOUNTING SCREWS - 2 sets.
15. Carabiner for block assembly - 3 pcs.

…….. PHOTO OF THE BAG……..+ BAG DIMENSIONS

Figure 3 - Transport bag dimensions

5. MAINTENANCE AND STORAGE

Personal protective equipment should be cleaned and disinfected so as not to damage the material (raw material) from which the device is made. For textiles (tapes, ropes) use cleaning agents for delicate fabrics which can be hand cleaned or machine washed. Rinse thoroughly. Plastic parts should only be washed in water. - If the equipment gets wet during cleaning or during use, dry it thoroughly in natural conditions, away from heat sources. Metal parts and mechanisms (springs, hinges, latches, etc.) may be periodically lightly lubricated to improve their operation.

Personal protective equipment should be stored loosely packed, in well-ventilated dry rooms, protected against light, UV radiation, dust, sharp objects, extreme temperatures and corrosive substances.

6. OVERALL DIMENSIONS

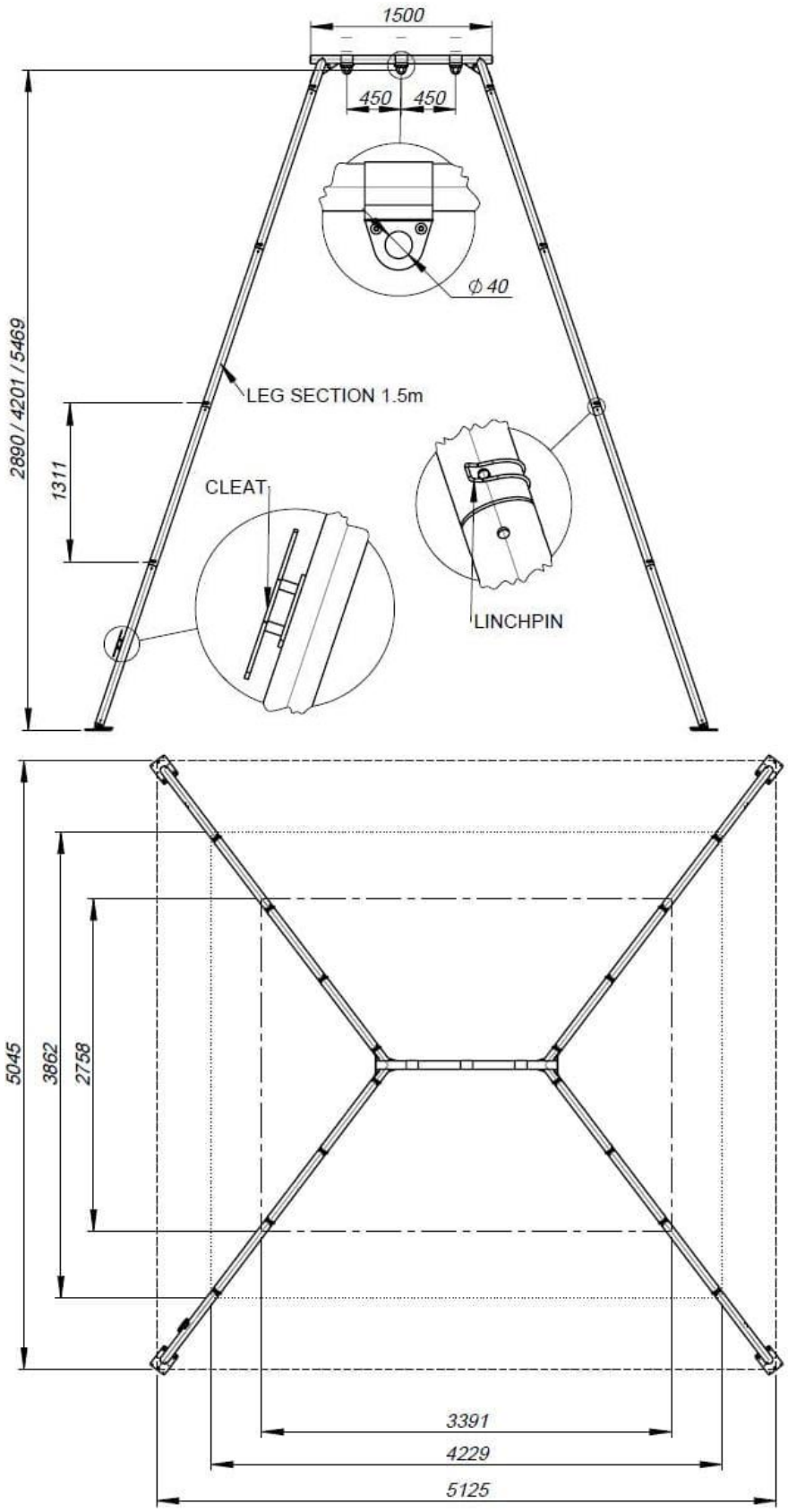

Figure 4 – Overall dimensions of the device

7. DURATION OF USE

The maximum service life of properly functioning devices is unlimited.

The equipment must be immediately withdrawn from use and decommissioned (it must be permanently destroyed) if it participated in the fall suspension or there are any doubts as to its reliability.

ATTENTION: The maximum period of use of the equipment depends on the intensity and environment of use. Using the device in harsh conditions, with frequent contact with water, sharp edges, corrosive substances, at extreme temperatures, may lead to its withdrawal from use even after one use.

8. PERIODIC INSPECTIONS

Periodic inspection of the equipment should be performed at least once a year, after every 12 months of use.

Periodic inspection may be performed by a competent person with appropriate knowledge and educated in this field.

After 5 years of use, it is recommended that periodic inspections are performed by the equipment manufacturer or a company authorized by the manufacturer to carry out such inspections.

9. FRAME INSTALLATION

It is recommended that the RX300 rack is installed by at least two people. But for disassembly it is better to have 3-4 people.

a) To the main beam, install one section from each leg (4x normal tube). Each leg consists of 4 consecutive sections (3 normal section = 12 normal tubes and 1 bottom section = 4x bottom tube). The last section of the leg (bottom mounted) is equipped with a screw plug to which the foot is mounted. **Each rack leg must be the same length!**

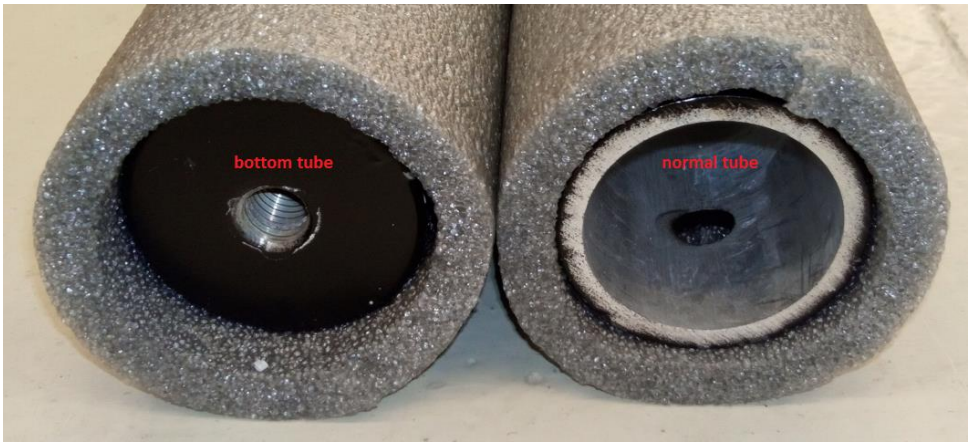

b) Raise the upper bar with one section installed.

c) The consecutive leg sections are connected with the use of pipe pins. **Close the pin so that it does not fall out!**

…

d) Remember to insert the legs axially, some angles will make it impossible to insert one pipe into another.

e) If there is a problem with inserting one pipe into another, use grease or possibly a dishwashing liquid.

f) After installing the first section, place the fast assembly tool / system in the anchor points.

g) Install the second section starting with the two front legs simultaneously and then repeat the same operation for the two rear legs. Remember to put the pin in the hole to close it after inserting one pipe into another.

h) Install the third section starting with one of the side legs, then installing the other leg on the same side. Note that when you install a second pipe on the same side, the stand may become unstable. Repeat the same step for the other side. Pipe # 3 is the hardest to insert, so be careful with this installation.

i) The fourth section involves installing the bottom tubes with foot threads. Before assembling them to the frame, screw them fully into the thread. The last section of the leg must have a plug with a threaded hole. Screw the foot into the hole all the way. After it is fully screwed in, the foot can be turned, which is necessary for its proper positioning in relation to the entire frame.

j) Install the 4 section the same way as section 3, paying special attention to the assembly of pipe 2 and 3. **IF YOU HAVE A FAST ASSEMBLY / DISASSEMBLY SYSTEM, YOU HAVE CLEATS ON THE TWO BOTTOM PIPES. THESE CLEATS MUST BE LOCATED DIAGONALLY.**

k) After assembling all the sections, straighten the rack legs. NOTE THAT IN THE PICTURE BELOW WITH A BENT LEG THE LEG HAS BEEN GRAPHICALLY BENT TO SHOW IT IN MORE DETAIL. IN NATURAL CONDITIONS SUCH BENDING WILL NOT OCCUR, BUT IT IS IMPORTANT TO STRAIGHTEN THE LEGS AND PLACE THEM DIRECTED TOWARDS THE CENTER OF THE FRAME.

l) Rig with 4 section looks like below:

m) **<u>The frame legs should be fastened crosswise with two straps!</u>** The length of the tape is 10.5 m. The method of threading the tape is shown in the figure below. To ensure the correct distribution of the force, it is recommended that both straps are tightened in the same way (the same number of straps should protrude loosely on both straps). While strapping the legs with the straps, one of the people should push lightly the legs towards the center of the frame's working field, so that the other person can tighten the straps properly.

n) The set includes one long strap that is used to fasten the frame around the circumference. Start strapping it from one leg and tie the belt at the leg, then unroll the belt around the circumference, threading it through each leg at the joint of the stand's foot until it returns to the first leg, where you make another tie.

o) In the case of a rack without the purchased device quick assembly / disassembly kit, it is recommended to hang the instrument after adding the first leg section. If this has not been done, the device can be hung after fully unfolding the frame from the ladder intended for this purpose.

p) After unfolding the frame, all the feet should be directed with the cut for the strapping tape towards the center of the frame's working field.

q) Check the stability of the feet, leveling if necessary, twist one of the feet to the appropriate height.

r) Before the exercises, check if the rack is complete and if it is assembled correctly, make sure to warm up properly before using the device.

s) If you notice disturbing signals, report to the manufacturer and do not take any corrective action on your own. Also, in this case, do not try to exercise on the machine.

t) 3-4 people are required to disassembly the stand. Follow the steps as per the assembly, but in the opposite order.

10. INSTALLATION OF A WORKING ROPE USING A KNAG AND CLIMBING BLOCKS

It is possible to suspend the required equipment on a polyester rope with a diameter of 10.5 mm with the use of two climbing blocks and cleats attached to one of the legs of the frame. The first pulley must be attached to one of the anchor points on the beam (eye nut). The second block should be attached to the opening in the side plate of the beam (between the legs). The rope threaded through the pulleys should be blocked on the cleat.

a) Rope assembly: - the rope attached on the first leg to the assembly cleat passes through a single pulley attached to the side assembly eye, then it runs through one of the races of the double pulley installed on the middle lug. It runs down where the single pulley is installed, returns through the second tread of the double pulley, continues through another pulley attached to the side ear and goes down to the leg diagonally from the first leg..

b) After pulling up to the maximum height of the working device, wrap the rope on the cleat in a manner ensuring safety.

c) Check the tightness of the knot on the cleat by loading the tool.

d) At the other end of the rope (hanging on the ground), tie an additional knot, which will allow you to lock the rope on the cleat when you pull / change the exercise device - if this condition is not met, the rope may escape upwards when changing the device.

e) **Do not leave the quick assembly / disassembly set without the acrobatics device attached. In this case, the rope may not be able to descend. If it is necessary to remove the device for maintenance purposes, attach a weight of min. 100g.**

f) You should always check the correctness of knots, the condition of the rope and the condition of all elements included in the quick assembly / disassembly of the device before performing the exercises. Check:
- if the rope has no abrasions
- that the knots are properly and securely tied
- condition of the blocks
- condition of the snap hooks
- the state of tightening the cleat to the rack leg

11. PERSONAL PROTECTION EQUIPMENT INSTALLATION

Personal suspension equipment, e.g. CR / WR series suspension against fall devices can be attached to one of the three anchor points available on the beam (eye nut)..

12. MAIN RULES FOR THE USE OF PERSONAL PROTECTION EQUIPMENT AGAINST FALLS FROM A HEIGHT

- Use of the RX300 must be in accordance with the instructions for use of the individual equipment and the standards:
  EN 361 - safety harness
  EN352-3; EN355; EN360 - for suspension devices
  EN362 - fasteners
  EN 795 / TS16415 - anchor points:
- personal suspension equipment should only be used by entities trained in its use.
- personal suspension equipment cannot be used by people whose health condition may affect their safety in everyday use or in rescue mode.
- Prepare a rescue plan that can be applied when needed.
- it is forbidden to make any modifications to the equipment without the written consent of the manufacturer.
- any repairs of the equipment may be performed only by the equipment manufacturer or his authorized representative.
- personal suspension equipment must not be used for purposes other than those for which it is intended.
- personal suspension equipment is personal equipment and should be used by one person.
- Before use, make sure that all components of the equipment that make up suspension against fall system work together properly. Periodically check the connections and matching of the components of the equipment to avoid them accidentally loosening or disconnecting.
- It is prohibited to use combinations of protective equipment in which the functioning of any one component of the equipment is affected by the operation of another.
- before each use of personal suspension equipment, perform a thorough visual inspection to check its condition and proper operation.
- during the visual inspection, all elements of the equipment should be checked, paying particular attention to any damage, excessive wear, corrosion, abrasions, cuts and incorrect operation. Particular attention should be paid to the individual devices:
  - ✓ in safety harnesses and belts for assigning positions to buckles, adjustment elements, attachment points (buckles), tapes, seams, belt loops;
  - ✓ in safety shock absorbers for hook loops, tape, seams, casing, connectors;
  - ✓ in cables and textile guides for rope, loops, thimbles, connectors, adjustment elements, braids;
  - ✓ in cables and steel guides for rope, wires, clamps, loops, thimbles, connectors, adjustment elements;
  - ✓ in rope or strap self-locking devices, proper operation of the retractor and the locking mechanism, casing, shock absorber, connectors;
  - ✓ in self-locking devices on the device body, proper sliding along the guide, operation of the locking mechanism, rollers, bolts and rivets, fasteners, safety shock absorber;
  - ✓ in connectors (snap hooks) for the load-bearing body, riveting, main latch, operation of the locking mechanism.
- at least once a year, after every 12 months of use, personal protective equipment must be withdrawn from use in order to perform a thorough periodic inspection. Periodic inspection may be performed by a person responsible in the workplace for periodic inspections of protective equipment and trained in this scope. Periodic inspections may also be performed by the equipment manufacturer or a person or company authorized by the manufacturer. Carefully check all elements of the equipment, paying particular attention to any damage, excessive wear, corrosion, abrasions, cuts and malfunction (see the previous point). In some cases, if the protective equipment has a complex and complex structure, such as retractable devices, periodic inspections may only be performed by the equipment manufacturer or his authorized representative. Following the periodic inspection, the date of the next inspection will be determined.
- regular periodic inspections are essential for the condition of the equipment and the user's safety, which depends on the equipment being fully operational and durable.
- during the periodic inspection, check legibility of all markings of the protective equipment (feature of the device).
- all information regarding the protective equipment (name, serial number, date of purchase and putting into service, user name, information on repairs and inspections and decommissioning) must be included in the user card for the device. The workplace in which the equipment is used is responsible for entries in the usage sheet. The card is filled in by the person

responsible for protective equipment in the workplace. It is not allowed to use personal protective equipment without a completed usage card.

- if the equipment is sold outside its country of origin, the equipment supplier must provide the equipment with instructions for use, maintenance and periodic inspection and repair information in the language of the country in which the equipment will be used.
- personal protective equipment must be immediately withdrawn from use if there are any doubts as to the condition of the equipment or its correct operation. The equipment may be put back into service after a detailed inspection has been carried out by the manufacturer of the equipment and its written consent to reuse the equipment.
- personal protective equipment must be withdrawn from use and scrapped (be permanently destroyed) if it was involved in arresting the fall.
- only the safety harness is the only device permitted to hold the body in personal fall protection equipment.
- the fall arrest system can be attached to the harness attachment points (buckles, loops) marked with a capital "A".

13. WARRANTY

The manufacturer's warranty is granted for a period of 12 months from the date of purchase of the device. In the event of a defect being discovered in any part, the warranty and warranty period for this part is extended by the time of repair and effective removal of the disclosed defect.

The warranty covers:

- Material defects ,
- Design defects,
- Defects of the anti-corrosion coating.

In accordance with the requirements of EN 365, the anchor point is subject to periodic inspections, performed at least every 12 months. Periodic inspection should be performed by the manufacturer's authorized service located at: _____ or a person trained in the inspection of such equipment.

A trained person is a person who, on the basis of his specialist education and declarations has sufficient knowledge of the safety and rescue measures installed and is so familiar with the applicable health and safety regulations, guidelines and generally recognized rules of technology that he can assess the operational safety and the correct application of security. ocenić bezpieczeństwo

Before each use of the system, check that the date of the next technical inspection has not expired. After this date, the system cannot be used. Before and after each use, visually check the completeness and proper technical condition of the system and the tension of the steel cable.

In the event of any defects or incompleteness, the system may not be used.

In order to settle any doubts, please contact the manufacturer and do not try to repair it yourself!

The system that was involved in suspension against fall must be decommissioned immediately!

The system that participated in the suspension against fall. may be put back into use after a detailed inspection by the manufacturer or a service authorized by him.

When using the system, special attention should be paid to dangerous phenomena affecting the operation of protective equipment or the user's safety, in particular: looping and sliding of ropes on sharp edges, pendulum falls, electricity, impact of extreme temperatures, damage to equipment, negative impact of climatic factors, chemicals, pollution.

It is not permitted to modify, repair or replace the original system components..

14. USE SHEET

DEVICE USE SHEET RX 300…….. (in accordance with EN365)			
Device catalog number	**RX300**	Serial number:	……..
Date of issue for use (installation)	……	Date of production:	……..
Installation location	…… ……		
User name:	…… ……		

Inspection and repair register					
No	Date of the inspection	Type of inspection/repair	Comments	Date of the next inspection	Service person's name and signature
1					
2					
3					
4					
5					
6					
7					
8					
9					
10					